BATH VOLUME *(APPROX)*	
100mm Below Rim	270 Litres
200mm Below Rim	182 Litres

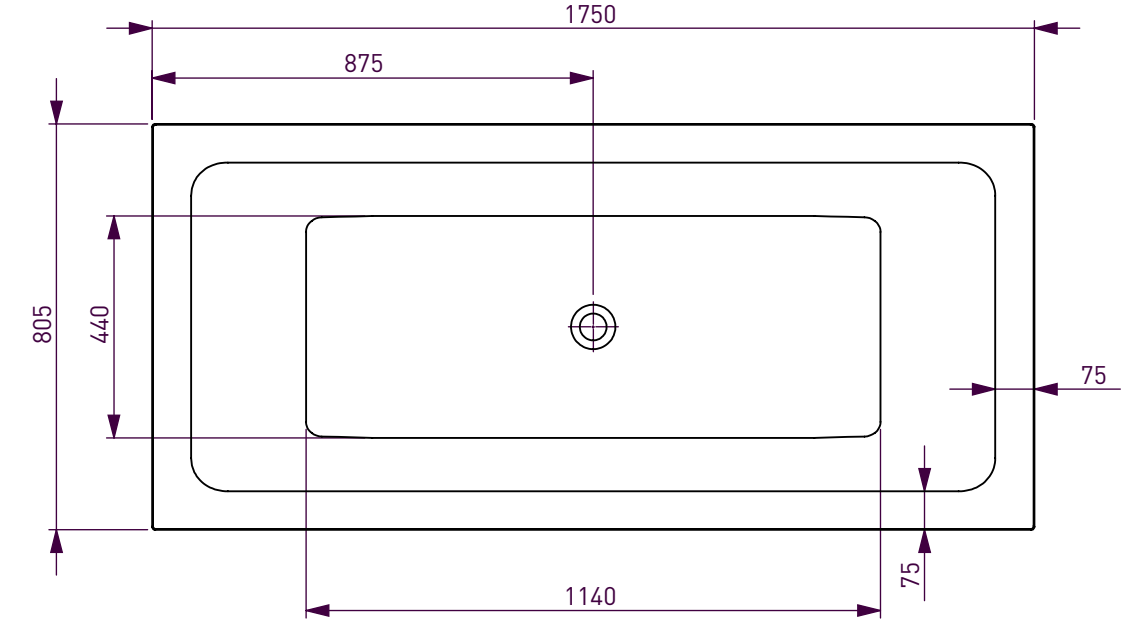

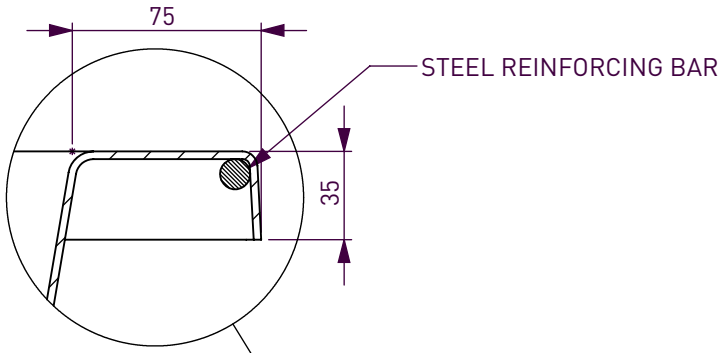

DETAIL B
SCALE 1 : 3

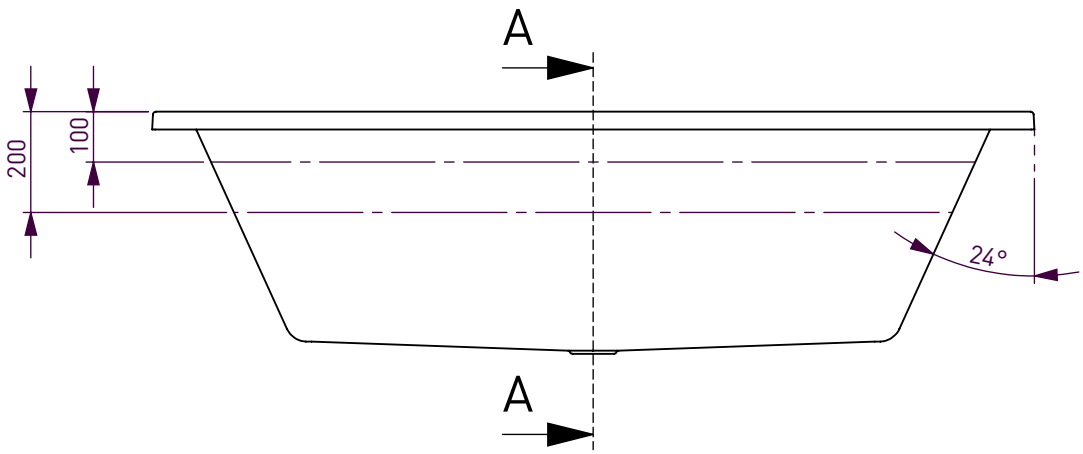

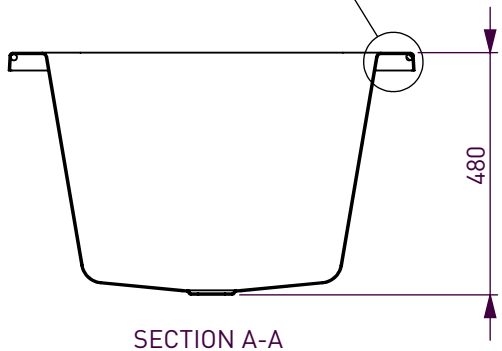

SECTION A-A

DECINA
DISCOVER INDULGENCE

NOMINAL MEASURMENTS ONLY - MANUFACTURING TOLERANCE +/-5mm APPLY	Scale: 1:15
All Information on this drawing is property of Decina Bathroomware	
CARINA 1750	