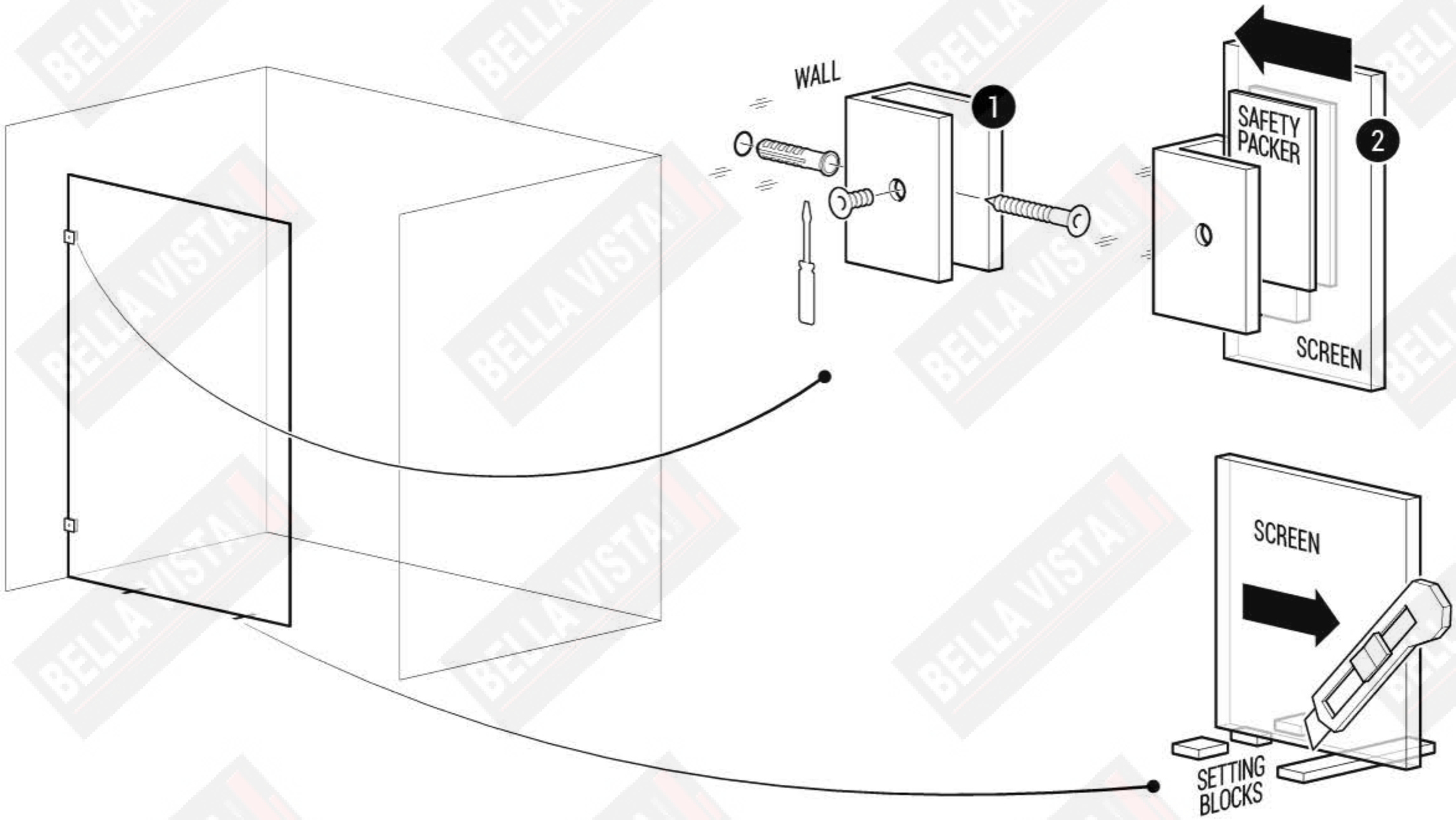
WALL
1
SAFETY PACKER
2
SCREEN
SCREEN
SETTING BLOCKS

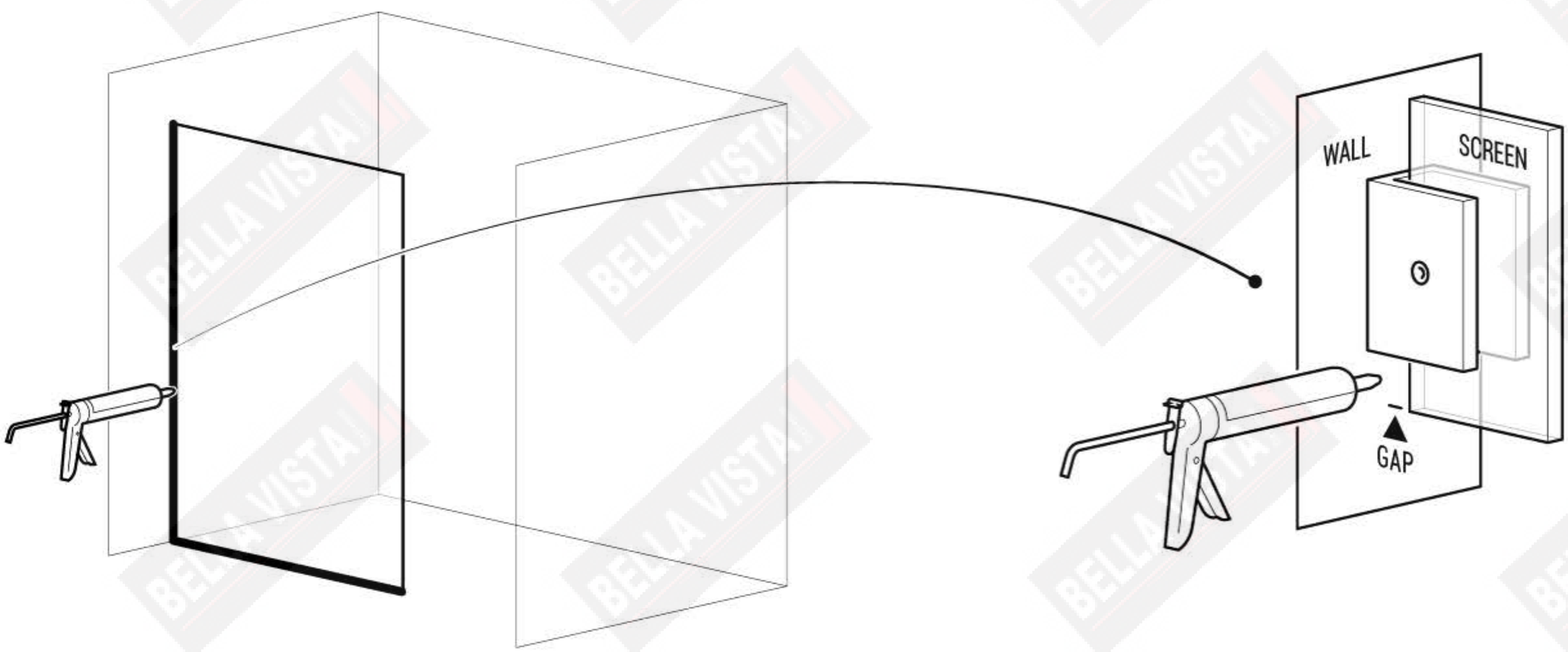
WALL
SCREEN
GAP

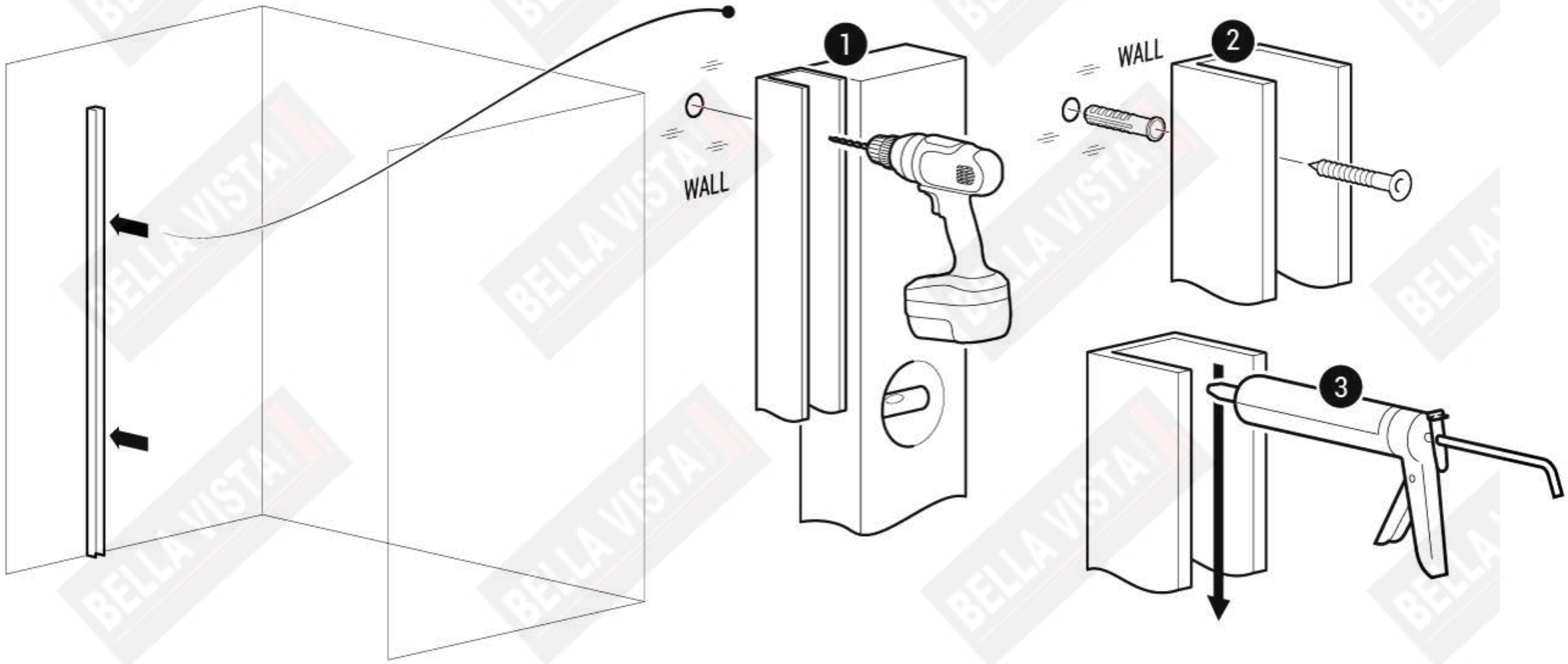
1
WALL
2
WALL
3

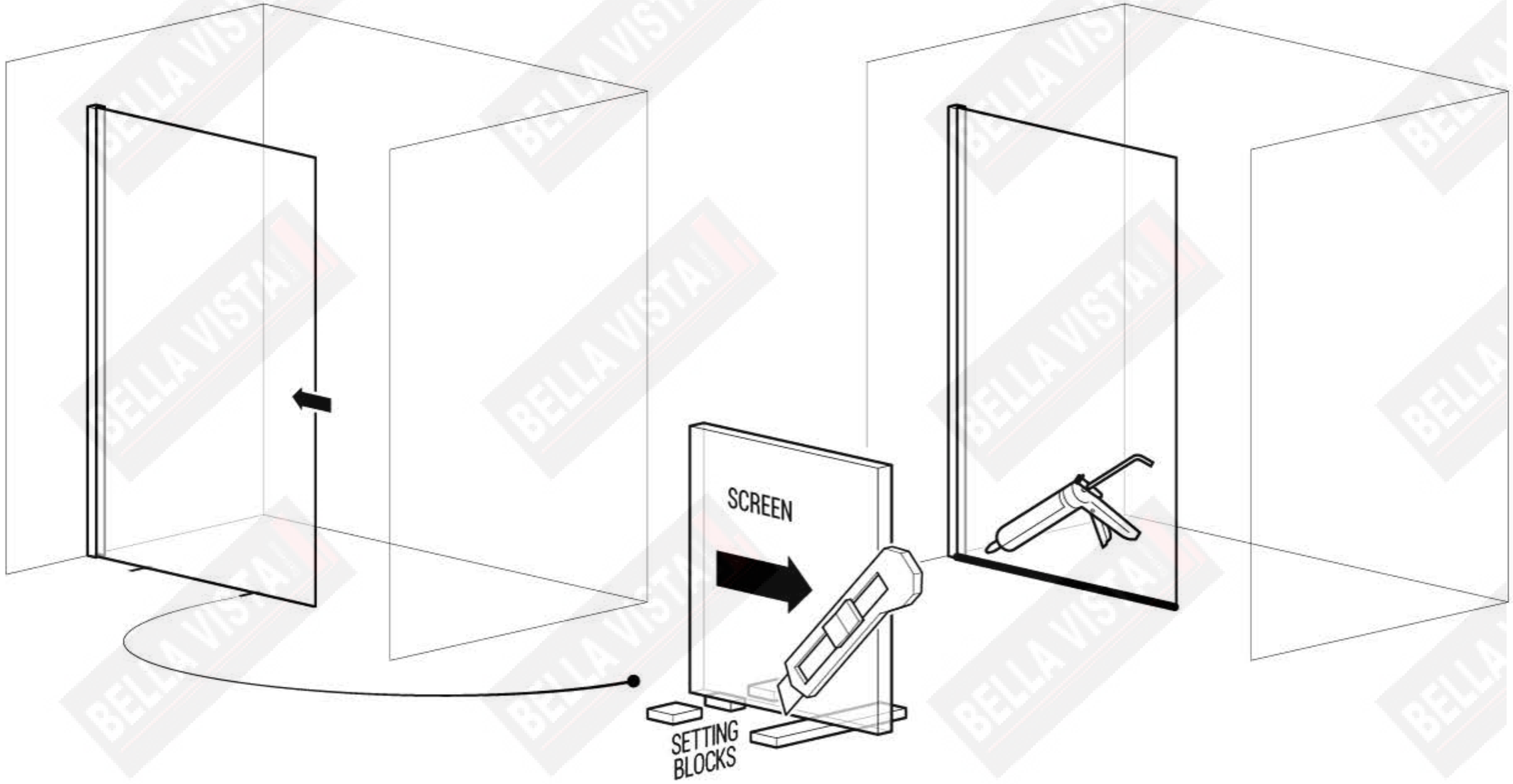
SCREEN
SETTING
BLOCKS